DRAWING LIST FOR TEST PACKAGE

WW-SLD-608

PROJECT NO.: 22328D

PROJECT TITLE : M15X Ph2 Project

No	PKG No	UNIT	LINE NUMBER			P&ID		REMARK
			ISO DRAWING No	SHEET	REV	P&ID No	REV	
1	608	3FA	350A-WW-SLD-ST1-N-8577-01	1 OF 2	1	CJ-M15W14-PR-A20-000115	2A	
2	608	3FA	350A-WW-SLD-ST1-N-8577-02	2 OF 2	0	CJ-M15W14-PR-A20-000115	2A	
3	608	3FA	350A-WW-SLD-ST1-N-8578-01	1 OF 1	1	CJ-M15W14-PR-A20-000115	2A	
4	608	4FA	350A-WW-SLD-ST1-N-8573-01	1 OF 1	0	CJ-M15W14-PR-A20-000114	1A	
5	608	4FA	350A-WW-SLD-ST1-N-8577-01	1 OF 1	0	CJ-M15W14-PR-A20-000115	2A	

ITEM NO.		W14-T-4222 B
SERVICE		CIF MBR NEUTRALIZATION TANK
Q'TY		1
TYPE		RECTANGULAR
SIZE	W x L x H | m	5.375 x 5.25 x 11.0 (EH 9.7)
CAPA.	m3	310.4 (EH 274)
HRT	hr	0.4 1A
MAT'L		P.C + FRP

ITEM NO.		W14-T-4223 B
SERVICE		CIF MBR 1'st ANOXIC TANK 1
Q'TY		1
TYPE		RECTANGULAR
SIZE	W x L x H | m	17.5 x 5.25 x 11.0 (EH 9.7)
CAPA.	m3	1,010.6 (EH 891)
HRT	hr	1A 1.4
MAT'L		P.C + FRP

ITEM NO.		W14-T-4224 B
SERVICE		CIF MBR 1'st ANOXIC TANK 2
Q'TY		1
TYPE		RECTANGULAR
SIZE	W x L x H | m	17.375 x 5.25 x 11.0 (EH 9.7)
CAPA.	m3	1,003.4 (EH 885)
HRT	hr	1A 1.4
MAT'L		P.C + FRP

ITEM NO.		W14-T-4225 B
SERVICE		CIF MBR 1'st OXIC TANK 1
Q'TY		1
TYPE		RECTANGULAR
SIZE	W x L x H | m	41.25 x 5.0 x 11.0 (EH 9.4)
CAPA.	m3	2,268.8 (EH 1,939)
HRT	hr	3.1 1A
MAT'L		P.C + FRP

ITEM NO.		W14-T-4226 B
SERVICE		CIF MBR 1'st OXIC TANK 2
Q'TY		1
TYPE		RECTANGULAR
SIZE	W x L x H | m	11.225 x 5.4 x 11.0 (EH 9.4)
CAPA.	m3	1A 666.8 (EH 570)
HRT	hr	0.9
MAT'L		P.C + FRP

ITEM NO.		W14-T-4227 B
SERVICE		CIF MBR 2'nd ANOXIC TANK 1
Q'TY		1
TYPE		RECTANGULAR
SIZE	W x L x H | m	11.35 x 5.275 x 11.0 (EH 9.1)
CAPA.	m3	658.6 (EH 545)
HRT	hr	1A 0.9
MAT'L		P.C + FRP

ITEM NO.		W14-T-4228 B
SERVICE		CIF MBR 2'nd ANOXIC TANK 2
Q'TY		1
TYPE		RECTANGULAR
SIZE	W x L x H | m	5.35 x 5.275 x 11.0 (EH 9.1)
CAPA.	m3	310.4 (EH 257)
HRT	hr	1A 0.4
MAT'L		P.C + FRP

ITEM NO.		W14-AD-4225 B
SERVICE		CIF MBR 1'st OXIC TANK AIR DIFFUSER 1
Q'TY	ea	356 1A
TYPE		MEMBRANE (TUBE)
CAPA.	L/min.ea	350
MAT'L		PP + EPDM

ITEM NO.		W14-AD-4226 B
SERVICE		CIF MBR 1'st OXIC TANK AIR DIFFUSER 2
Q'TY	ea	112 1A
TYPE		MEMBRANE (DISC)
CAPA.	L/min.ea	100
MAT'L		PP + EPDM

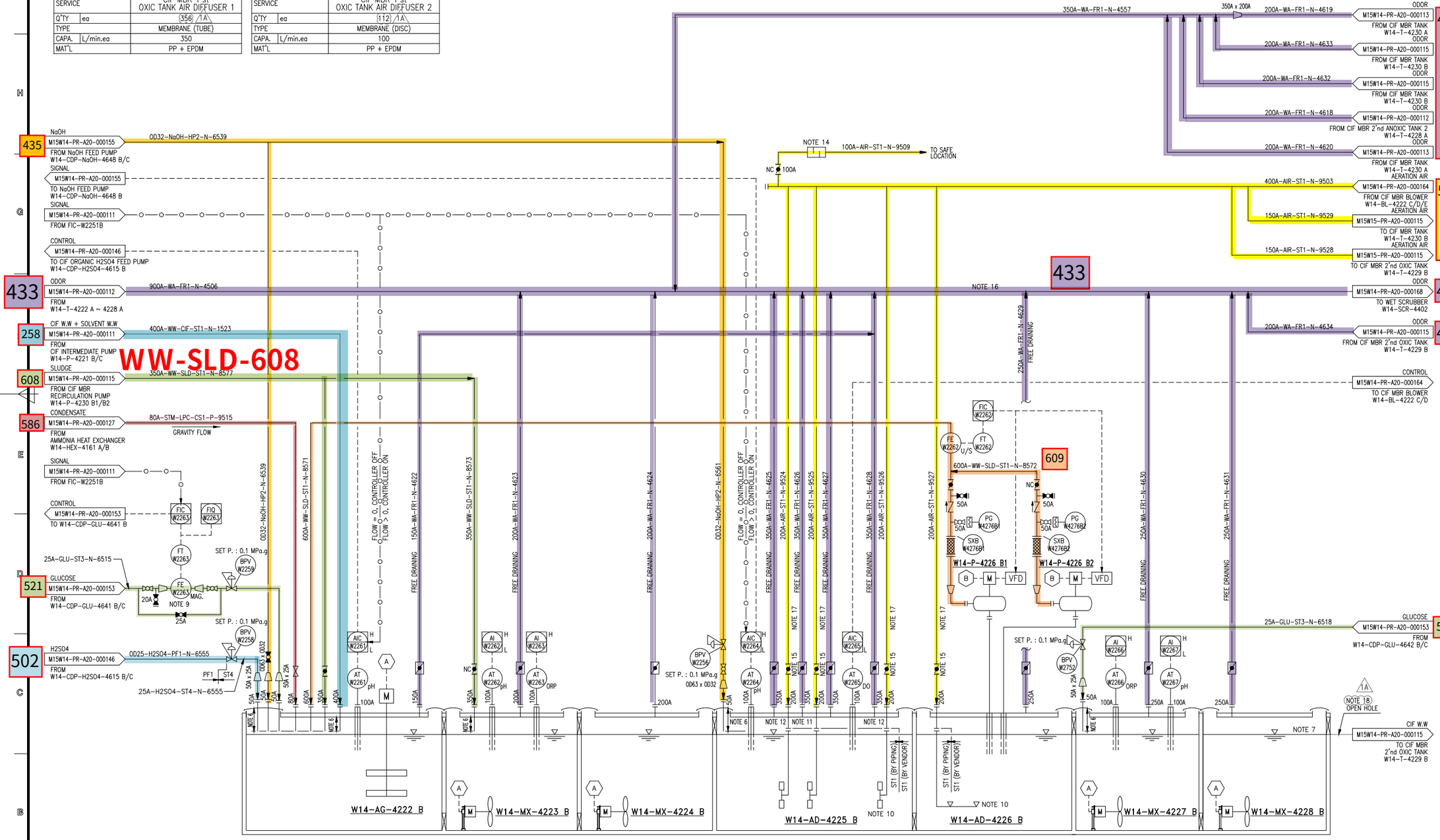

ITEM NO.		W14-AG-4222 B
SERVICE		CIF MBR NEUTRALIZATION AGITATOR
Q'TY		1
TYPE		HYDRO PADDLE NOTE 8
SPEED	rpm	1A 24
MAT'L		STS316L/STS316L
POWER	kW	7.5 1A

ITEM NO.		W14-MX-4223 B
SERVICE		CIF MBR 1'st ANOXIC MIXER 1
Q'TY		1 1A
TYPE		SUBMERSIBLE
SPEED	rpm	1A 300 1A
MAT'L		STS431/STS304
POWER	kW	1 1A

ITEM NO.		W14-MX-4224 B
SERVICE		CIF MBR 1'st ANOXIC MIXER 2
Q'TY		1 1A
TYPE		SUBMERSIBLE
SPEED	rpm	300 1A
MAT'L		STS431/STS304
POWER	kW	1A 11

ITEM NO.		W14-P-4226 B1/B2
SERVICE		CIF MBR SLUDGE INNER RECYCLE PUMP
Q'TY		1 + 1
TYPE		VERTICAL (VWF)
CAPA.	m3/hr.ea x mH	1,875 x 10 (0.10MPa)
MAT'L		SSC13/SSC13
POWER	kW	90 1A

ITEM NO.		W14-MX-4227 B
SERVICE		CIF MBR 2'nd ANOXIC MIXER 1
Q'TY		1 1A
TYPE		SUBMERSIBLE
SPEED	rpm	900 1A
MAT'L		STS431/STS304
POWER	kW	11 1A

ITEM NO.		W14-MX-4228 B
SERVICE		CIF MBR 2'nd ANOXIC MIXER 2
Q'TY		1 1A
TYPE		SUBMERSIBLE
SPEED	rpm	1200 1A
MAT'L		STS431/STS304
POWER	kW	5.5 1A

대외비

KEY PLAN (3F)

433 NOTE

1. TANK의 HWL 이하로 연결되는 모든 배관은 BLOCK 밸브 설치할 것.
2. 3m 이상 높은 곳에 설치된 밸브는 CHAIN VALVE 또는 PLATFORM 구성할 것.
3. MANHOLE SIZE : 1000W x 1000L x 2EA/TANK MANHOLE COVER : FRP
4. 운전 시 CLOSE 되는 배관에는 LOTO 설치.
5. AGITATOR MAT'L 표기 : SHAFT/BLADE
6. TANK 내 유입시, 육안 확인이 가능하고, 비산이 되지 않도록 유도 깊이로 반영 할 것. (SLAB로부터 100mm 떨어질 것)
7. 내부 FRP LINING TANK의 SLEEVE는 US304 + FRP LINING 적용.
8. 추후 VENDOR 에서 결정한다.
9. INSTRUMENT VENDOR 선정 후 CONTROL SCHEME 및 CONTROL VALVE INLET / OUTLET NOZZLE SIZE 조정 예정.

583

12. CIF 1'st/2'nd OXIC TANK는 선회류 포기가 되도록 배열 되어야하나, 건물최적화에 따른 산기관 설치공간 부족으로 M15X PH4 WWT에는 적용 안함.
13. 1차 호기조 내 AIR 확인이 가능하도록 중간지점에 점검구 반영할 것.
14. 1차 호기조 내 pH, DO 계측기의 설치 위치는 중간 지점보다 상측에 설치할 것.

433

13. CENTRIFUGAL PUMP MAT'L 표기 : CASING / IMPELLER
14. LOOSE SUPPLY INSTALLATION BY PURCHASER.
15. AIR량 조정을 위해 GEAR OPERATED BUTTERFLY VALVE를 적용한다.
16. 배기 배관 구성 및 배관 NUMBER는 도면번호 W14-PR-A20-000168을 기준으로 한다.
17. 유체의 흐름을 확인할 수 있도록 LINE 상에 PRESSURE GAUGE를 설치할 것. (TAG NO. 이래 참조)

PG 15A WXXXX

- 200A-AIR-ST1-N-9524 : PG-W2264
- 200A-AIR-ST1-N-9525 : PG-W2265
- 200A-AIR-ST1-N-9526 : PG-W2266
- 200A-AIR-ST1-N-9527 : PG-W2267

18. OPENING SIZE IS 3,500mm x 1,600mm 1A

REV.	수정 DESCRIPTION	날짜 DATE
1A	REVISED AFC	25.08.14
1	REVISED AFC	25.01.17
0	APPROVAL FOR CONSTRUCTION	24.09.30

제 도 DRAWN BY	이 인 락
검 토 CHECKED BY	한 진 희
승 인 APPROVED BY	박 동 영
제 작 사	SK 에코플랜트
공 사 명 PROJECT TITLE	M15X Ph4 WWT Project
도면명 DWG. TITLE	PIPING & INSTRUMENT DIAGRAM CIF MBR ANOXIC & OXIC TANK B (2/2)
축 척 SCALE	NONE
날 짜 DATE	2025. 08. 14
PROJECT NO.	22330D
도면번호 SHEET NO.	CJ-M15W14-PR-A20-000114 REV. 1A

C:WUsersWTOPWDesktopWP&ID251013W[M15X Ph-4 for 인허가]CAD FILE_0910WCJ-M15W14-PR-A20-000114 R1 P&ID FOR CIF M

ITEM NO.	W14-AD-4229 B
SERVICE	CIF MBR 2'nd OXIC TANK AIR DIFFUSER
Q'TY	(110) 2A
TYPE	MEMBRANE (DISC)
CAPA. L/min.ea	100
MAT'L	PP + EPDM

ITEM NO.		W14-T-4229 B
SERVICE		CIF MBR 2'nd OXIC TANK
Q'TY		1
TYPE		RECTANGULAR
SIZE	W x L x H m	(5.175 x 5.25 x 11.0 (EH 8.8)) 2A
CAPA.	m3	(298.9 (EH 239))
HRT	min	0.4
MAT'L		R.C + FRP

ITEM NO.		W14-T-4230 B
SERVICE		CIF MBR TANK
Q'TY		1
TYPE		RECTANGULAR 2A
SIZE	W x L x H m	(2.9 x 22.65 x 6.15 (EH 3.8)) (2.85 x 22.65 x 6.15 (EH 3.8))
CAPA.	m3	801 (EH 495)
HRT	hr	0.8
MAT'L		P.C + FRP

ITEM NO.	W14-T-4232 B
SERVICE	CIF MBR CLEANING TANK
Q'TY	1
TYPE	RECTANGULAR
SIZE W x L x H m	(2.6 x 3.0 x 4.7 (EH 3.2))
CAPA. m3	36.7 (EH 25) 2A
HRT min	–
MAT'L	C.S + FRP

ITEM NO.		W14-AD-4230 B
SERVICE		CIF MBR AIR DIFFUSER 2A
Q'TY	ea	(64) 2A
TYPE		MEMBRANE (DISC)
CAPA.	L/min.ea	(100) 2A
MAT'L		PP + EPDM

ITEM NO.	W14-EJ-4231B
SERVICE	CIF MBR EJECTOR UNIT
Q'TY ea	1
CAPA. Nl/s.ea	BY VENDOR
MAT'L	BY VENDOR

ITEM NO.	W14-MBR-4230 B
SERVICE	CIF MBR MEMBRANE
CAPA. m3/d	15,000

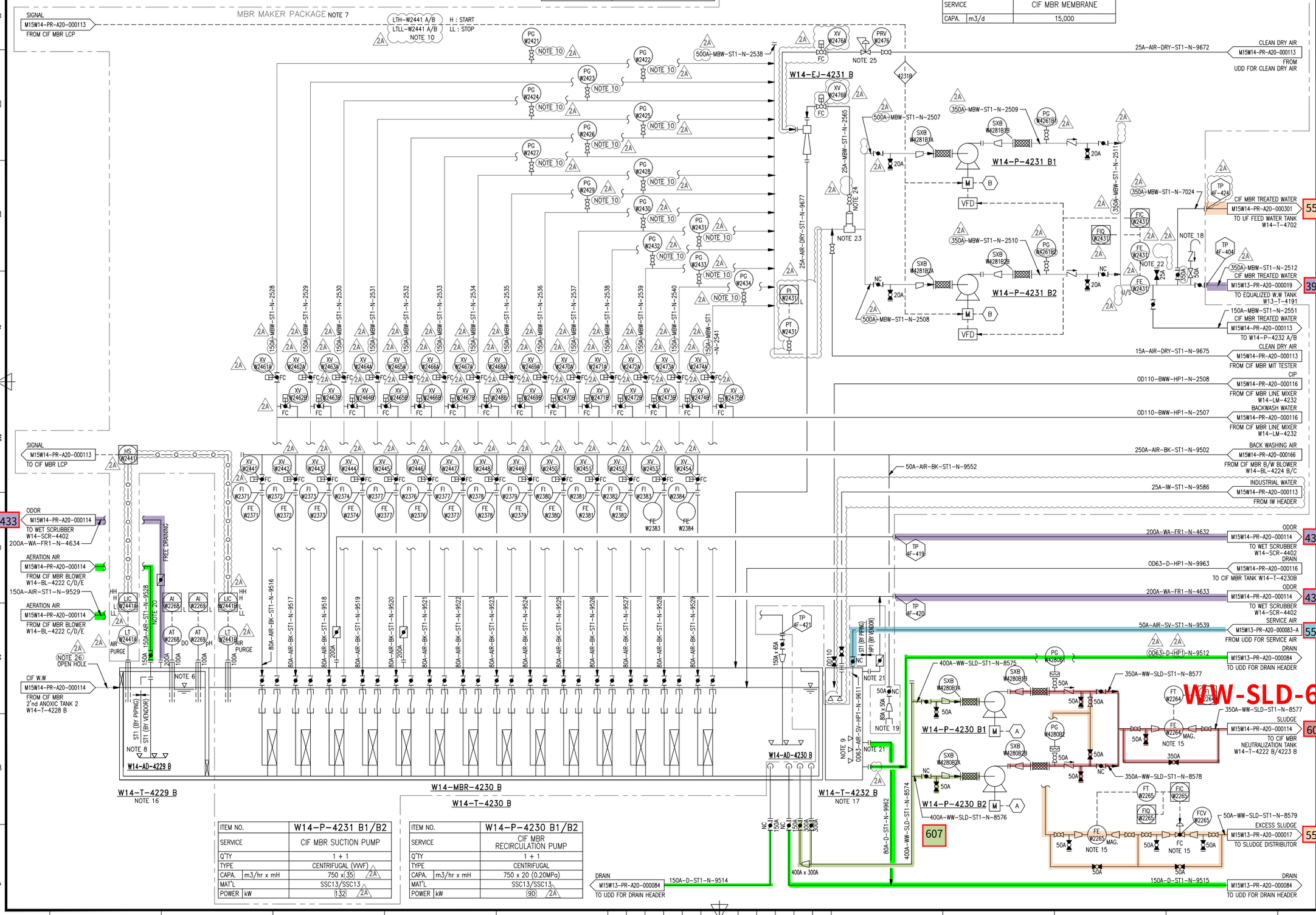

ITEM NO.	W14-P-4231 B1/B2
SERVICE	CIF MBR SUCTION PUMP
Q'TY	1 + 1
TYPE	CENTRIFUGAL (VVVF)
CAPA. m3/hr x mH	750 x (35) 2A
MAT'L	SSC13/SSC13
POWER kW	(132) 2A

ITEM NO.	W14-P-4230 B1/B2
SERVICE	CIF MBR RECIRCULATION PUMP
Q'TY	1 + 1
TYPE	CENTRIFUGAL
CAPA. m3/hr x mH	750 x 20 (0.20MPa)
MAT'L	SSC13/SSC13
POWER kW	(90) 2A

대외비

KEY PLAN (3F)

NOTE

1. TANK와 HWL 이하로 연결되는 모든 배관은 BLOCK 밸브 설치할 것.
2. 2m 이상 높은 곳에 설치된 밸브는 CHAIN VALVE 또는 PLATFORM 구성할 것.
3. MANHOLE SIZE : 1000W x 1000L x 2EA/TANK MANHOLE COVER : FRP
4. 운전 시 CLOSE 되는 배관에는 LOTO 설치.
5. CENTRIFUGAL PUMP MAT'L 표기 : CASING / IMPELLER
6. 내부 FRP LINING TANK의 SLEEVE는 SUS304 + FRP LINING 적용.
7. PACKAGE VENDOR 선정 후 내부 SYSTEM (모든 EQUIPMENT SPEC., LINE SIZE, MBR Nos., INSTRUMENT CONTROL SCHEME 등) 확정 예정.
8. 전면표기.
9. 측면표기.
10. 음압계 설치. DESIGN RANGE : −1~1 BAR
556 INTERLOCK NO. I−4231 B (W14−P−4231 B1/B2 AUTO STOP) : REMOTE STATUS에서 W14−T−4229 B LEVEL (LI−W2321) LOW LOW STOP.
12. OPERATION TIME CHART.

PROCESS	SERVICE	B/W READY	B/W	RESTART
TIME(sec)	24hr	2	30	30
XV−2331A	OPEN	–	–	–
XV−2331B	–	–	OPEN	–
XV−2321	–	OPEN	–	OPEN
B/W PUMP	–	–	RUN	–

390 나머지 ON−OFF VALVE들도 동일하게 적용한다.

13. CIF MBR TANK CRANE은 PACKAGE VENDOR에서 공급한다.
14. DELETED.
15. INSTRUMENT VENDOR 선정 후 CONTROL SCHEME 및 CONTROL VALVE INLET / OUTLET NOZZLE SIZE 확정 예정.
16. MANHOLE 2개소 설치하여야 한다.
17. SUPPLIED BY MBR PACKAGE VENDOR.
18. HIGH POINT에 SIPHON BREAKER 설치할것. (CHECK VALVE의 경우 DUAL PLATE TYPE으로 적용)
19. 계의 세정간 CASSETTE CONNECTION 용도. MBR CLEANING TANK 인근에 설치할 것.
20. 유체의 흐름을 확인할 수 있도록 LINE 상에 PRESSURE GAUGE를 설치할 것. (TAG NO. 아래 참조)

PG 15A WXXXX

– 150A−AIR−ST1−N−9528 : PG−W2381

21. CIF MBR CLEANING TANK SHALL BE INSTALLED COVER WITH DUCT. OVERFLOW LINE(80A) TO DRAIN HEADER.
22. 덕도개 설치를 위한 FUTURE CONNECTION용.
23. PORT SIZE 350A. (TEE + 단관 + CAP 마감 : 단관 길이는 W14−P−4231 PUMP의 CASING 상단 보다 높게 제작)
24. AIR REALEASE VAVLE
25. SET POINT : 6BAR −> 3 ~ 1BAR
26. SIZE IS 3,500mm x 1,600mm

REV.	DESCRIPTION	DATE
2A	REVISED AFC	25.08.14
2	REVISED AFC	25.01.17
1	REVISED AFC	24.10.31

433 433

설 계 DRAWN BY	이 인 학	
검 토 CHECKED BY	한 진 희	
승 인 APPROVED BY	박 동 영	

사 SK 에코플랜트

608 사 명 PROJECT TITLE M15X Ph4 WWT Project

도면명 DWG. TITLE PIPING & INSTRUMENT DIAGRAM CIF MBR DISCHARGE & CIRCULATION PUMP B (2/2)

558 척 SCALE NONE

날 짜 DATE 2025. 08. 14

PROJECT NO.	22330D	REV.
도면번호 SHEET NO.	CJ-M15W14-PR-A20-000115	2A

A1(594x841mm x2mm)

C:WUsersWTOPWDesktopWP&ID251013WM15X Ph-4 for 인허가CAD FILE_0910WCJ-M15W14-PR-A20-000115 R1 P&ID FOR CIF M

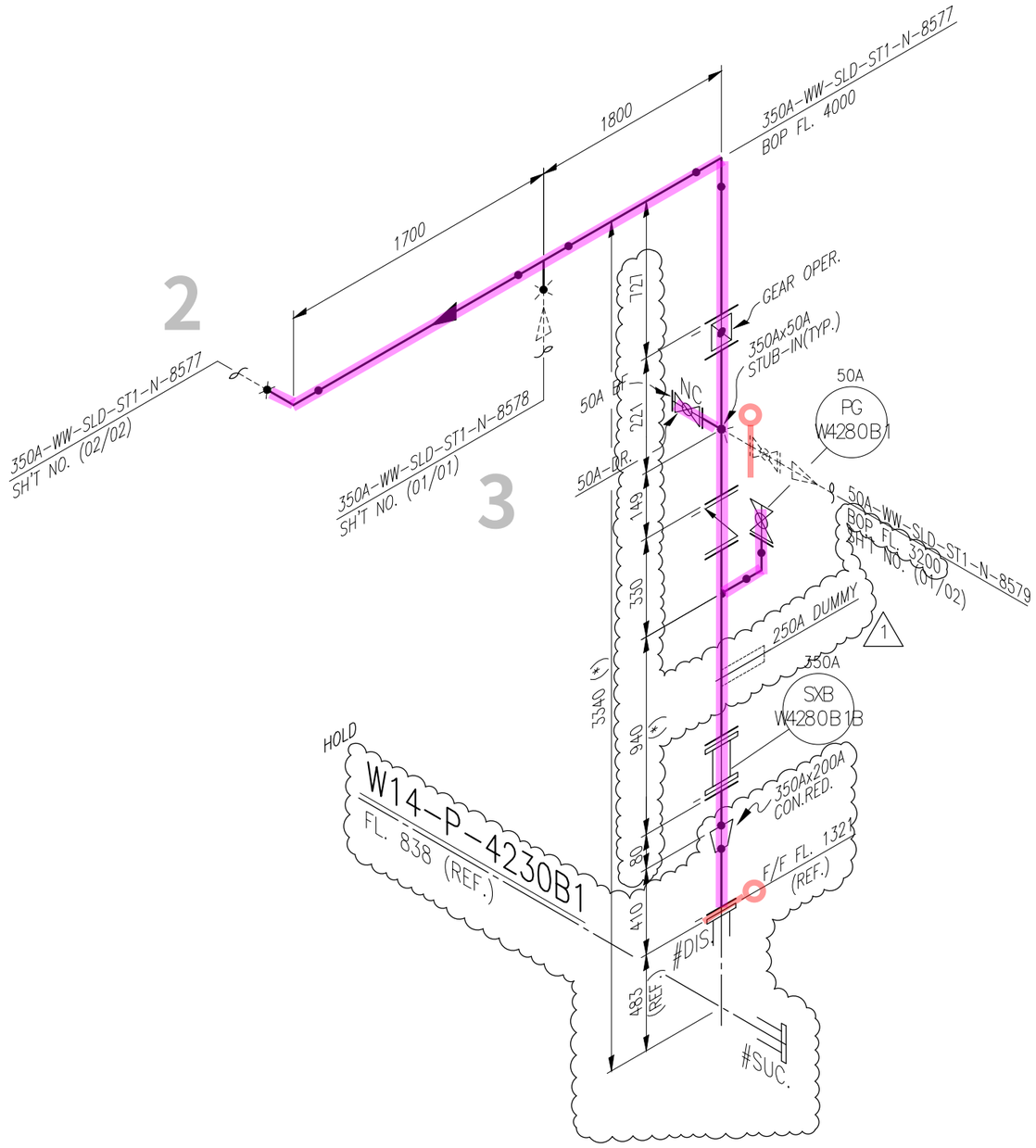

<NOTE>
1. (*) FIELD ADJUST

SK ecoplant

ITEM	SIZE	Q'TY	DESCRIPTION
		ST1	
P	350A	3.9M	PIPE, STS 304TP, ERW, BE – SCH 10S
P	200A	0.1M	PIPE, STS 304TP, ERW, BE – SCH 10S
P	50A	0.3M	PIPE, STS 304TP, ERW, PE – SCH 10S
E90	350A	2EA	ELBOW 90 DEG SR, STS304, ERW, BE – SCH 10S
E90	50A	1EA	ELBOW 90 DEG, STSF304, SW – SCH 10S
T	350A	1EA	TEE EQUAL, STS304, ERW, BE – SCH 10S
STU	350Ax50A	3EA	STUB-IN BRANCH
F	350A	6EA	FLG SO, KS 10K, RF, STS304
F	200A	1EA	FLG SO, KS 10K, RF, STS304
F	50A	2EA	FLG SO, KS 10K, RF, STS304
FB	50A	1EA	FLG BLIND, KS 10K, RF, STS304
G	350A	6EA	GASKET, KS 10K, RF, PTFE+EPDM, 3.0MM TH'K
G	200A	1EA	GASKET, KS 10K, RF, PTFE+EPDM, 3.0MM TH'K
G	50A	3EA	GASKET, KS 10K, RF, PTFE+EPDM, 3.0MM TH'K
B	350A	2SET	MACHINE BOLT & NUTS :STS 304 / W WASHERS
B	200A	1SET	MACHINE BOLT & NUTS :STS 304 / W WASHERS
B	50A	3SET	MACHINE BOLT & NUTS :STS 304 / W WASHERS
BL	350A	2SET	MACHINE BOLT & NUTS :STS 304 / W WASHERS(SPECIAL)
VB	50A	2EA	BALL VALVE, KS 10K, RF FLG'D, BODY-SSC13 /
			TRIM-STS304 / SEAT-PTFE, FB, LEVER
VC	350A	1EA	CHECK VALVE, KS 10K, WAFER RF, BODY-SSC13 /
			TRIM-STS304, DUAL PLATE
VF	350A	1EA	BUTTERFLY VALVE, KS 10K, WAFER RF, BODY-GCD450 /
			TRIM-STS304 / EPDM-LINED, GEAR
FLXB	350A	1EA	FLEXIBLE JOINT(TPC STEEL TYPE)
PG	50A	1EA	PRESSURE GAUGE, KS 10K, RF
LOTO	50A	1EA	LOTO

* PIPE : P/P1 * 90° ELBOW : E90 * 45° ELBOW : E45 * TEE : T * RED.TEE : TR * STUB-IN : STU * REINFORCING PAD : RP * CON.RED : RC * ECC.RED : RE * CON.SWAGE : RCS/RCS1 * ECC.SWAGE : RES/RES1 * NIPPLE : NP/NP1/NP2 * CAP : CAP/CAP1 * PLUG : PLG * FULL COUPLING : FC * HALF COUPLING : HF/HF1
* STUB-IN : STU * SOCKET(HDPE/PVC) : SC * SADDLE(HDPE) : SD * FLANGE : F/F1 * GASKET : G/G1/G2 * BOLT & NUT : B/B1 * BLIND FLANGE : FB/FB1 * GATE VA. : VG/VG1/VG2 * BALL VA. : VB/VBL0/VB1/VB1L0/VB2/VB2L0 * BUTTERFLY VA. : VF/VF4 * CHECK VA. : VC/VC1/VC2/VC3/VC4/VC5/VC6/VC7
* GLOBE VA. : VL/VL1/VL2 * DIAPHRAGM VA. : VD/VDL0 * DAMPER : VP * QUICK COUPLING : SQC * FLEXIBLE JOINT(STEEL) : FLXB * FLEXIBLE JOINT(RUBBER) : FLXR * FLEXIBLE JOINT(STEEL_PTFE LINED) : FLXL * FLEXIBLE HOSE : FLXH * STEAM TRAP : ST * SPRAY NOZZLE : SPN * EMERGENCY SHOWER : SSH
* STRAINER(Y-TYPE) : YSTR * STRAINER(T-TYPE) : TSTR * STRAINER(BUCKET-TYPE) : BSTR * ANCHOR PLATE : STOP * BIRD SCREEN : BS * ISOLATION KIT : IK * UNLOADING BOX : UB * AIR TRAP : AT * LOTO : LOTO * SIGHT GLASS : SG * PRESSURE GAUGE : PG * SHILED : SH * SPECIAL BOLT & NUT : BL/BL1

CLIENT SK hynix

1

INSULATION	CODE	N	CONDITION	PRESS. (kg/cm2g)	TEMP. (°C)
	THICK.	–	DESIGN	3.1	60
			OPERATING	2.0	AMB

AREA W14
UNIT 3FA
REF. PLAN DWG. CJ-M15W14-PI-A30-030001-A
REF. P & ID CJ-M15W14-PR-A20-000115

REV. NO.	DATE	DESCRIPTION	BY	CHK	APP'D
1	25.03.31	REVISED AS MARKED	황래종	안남후	박동영
0	25.01.24	APPROVED FOR CONSTRUCTION	황래종	안남후	박동영

CONTRACTOR SK ecoplant
PROJECT NAME M15X Ph4 Project
COMMODITY WW-SLD
JOB NO. 22330D
LINE NO. 350A-WW-SLD-ST1-N-8567
SH'T NO. 01 / 02
REV. 1

경고 : 본 도면은 SK HYNIX의 기업비밀 자료로서, 어떠한 경우에도 목적 외 사용, 복제, 제3자에게 공개, 누설 및 유출할 수 없으며, 회사는 유포자의 불법 사용으로 피해가 발생할 경우 유포자에게 민/형사상 책임을 요구할 수 있음.

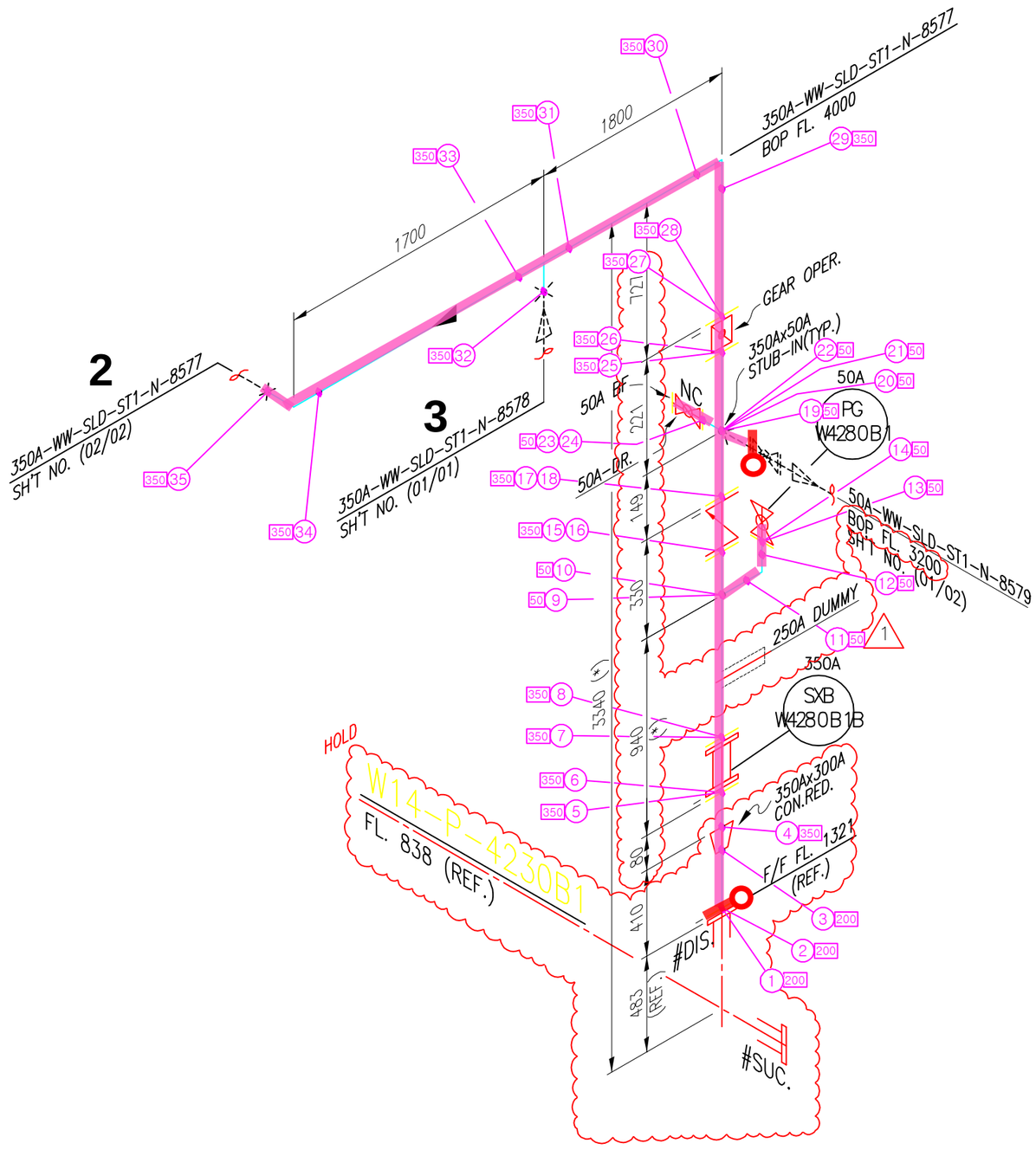

<NOTE>
1. (*) FIELD ADJUST

SK ecoplant

ITEM	SIZE	Q'TY	DESCRIPTION
		ST1	
P	350A	3.9M	PIPE, STS 304TP, ERW, BE – SCH 10S
P	200A	0.1M	PIPE, STS 304TP, ERW, BE – SCH 10S
P	50A	0.3M	PIPE, STS 304TP, ERW, PE – SCH 10S
E90	350A	2EA	ELBOW 90 DEG SR, STS304, ERW, BE – SCH 10S
E90	50A	1EA	ELBOW 90 DEG, STSF304, SW – SCH 10S
T	350A	1EA	TEE EQUAL, STS304, ERW, BE – SCH 10S
STU	350Ax50A	3EA	STUB-IN BRANCH
F	350A	6EA	FLG SO, KS 10K, RF, STS304
F	200A	1EA	FLG SO, KS 10K, RF, STS304
F	50A	2EA	FLG SO, KS 10K, RF, STS304
FB	50A	1EA	FLG BLIND, KS 10K, RF, STS304
G	350A	6EA	GASKET, KS 10K, RF, PTFE+EPDM, 3.0MM TH'K
G	200A	1EA	GASKET, KS 10K, RF, PTFE+EPDM, 3.0MM TH'K
G	50A	3EA	GASKET, KS 10K, RF, PTFE+EPDM, 3.0MM TH'K
B	350A	2SET	MACHINE BOLT & NUTS :STS 304 / W WASHERS
B	200A	1SET	MACHINE BOLT & NUTS :STS 304 / W WASHERS
B	50A	3SET	MACHINE BOLT & NUTS :STS 304 / W WASHERS
BL	350A	2SET	MACHINE BOLT & NUTS :STS 304 / W WASHERS(SPECIAL)
VB	50A	2EA	BALL VALVE, KS 10K, RF FLG'D, BODY-SSC13 /
			TRIM-STS304 / SEAT-PTFE, FB, LEVER
VC	350A	1EA	CHECK VALVE, KS 10K, WAFER RF, BODY-SSC13 /
			TRIM-STS304, DUAL PLATE
VF	350A	1EA	BUTTERFLY VALVE, KS 10K, WAFER RF, BODY-GCD450 /
			TRIM-STS304 / EPDM-LINED, GEAR
FLXB	350A	1EA	FLEXIBLE JOINT(TPC STEEL TYPE)
PG	50A	1EA	PRESSURE GAUGE, KS 10K, RF
LOTO	50A	1EA	LOTO
RC	350Ax300A	1EA	REDUCER CON, STS304, ERW, BE – SCH 10S

* PIPE : P/P1 * 90° ELBOW : E90 * 45° ELBOW : E45 * TEE : T * RED.TEE : TR * STUB-IN : STU * REINFORCING PAD : RP * CON.RED : RC * ECC.RED : RE * CON.SWAGE : RCS/RCS1 * ECC.SWAGE : RES/RES1 * NIPPLE : NP/NP1/NP2 * CAP : CAP/CAP1 * PLUG : PLG * FULL COUPLING : FC * HALF COUPLING : HF/HF1
* STUB-IN : STU * SOCKET(HDPE/PVC) : SC * SADDLE(HDPE) : SD * FLANGE : F/F1 * GASKET : G/G1/G2 * BOLT & NUT : B/B1 * BLIND FLANGE : FB/FB1 * GATE VA. : VG/VG1/VG2 * BALL VA. : VB/VBL0/VB1/VB1L0/VB2/VB2L0 * BUTTERFLY VA. : VF/VF4 * CHECK VA. : VC/VC1/VC2/VC3/VC4/VC5/VC6/VC7
* GLOBE VA. : VL/VL1/VL2 * DIAPHRAGM VA. : VD/VDL0 * DAMPER : VP * QUICK COUPLING : SQC * FLEXIBLE JOINT(STEEL) : FLXB * FLEXIBLE JOINT(RUBBER) : FLXR * FLEXIBLE JOINT(STEEL_PTFE LINED) : FLXL * FLEXIBLE HOSE : FLXH * STEAM TRAP : ST * SPRAY NOZZLE : SPN * EMERGENCY SHOWER : SSH
* STRAINER(Y-TYPE) : YSTR * STRAINER(T-TYPE) : TSTR * STRAINER(BUCKET-TYPE) : BSTR * ANCHOR PLATE : STOP * BIRD SCREEN : BS * ISOLATION KIT : IK * UNLOADING BOX : UB * AIR TRAP : AT * LOTO : LOTO * SIGHT GLASS : SG * PRESSURE GAUGE : PG * SHILED : SH * SPECIAL BOLT & NUT : BL/BL1

CLIENT: SK hynix

1

INSULATION	CODE	N	CONDITION	PRESS. (kg/cm2g)	TEMP. (°C)
	THICK.	–	DESIGN	3.1	60
			OPERATING	2.0	AMB

AREA: W14
UNIT: 3FA
REF. PLAN DWG.: CJ-M15W14-PI-A30-030001-A
REF. P & ID: CJ-M15W14-PR-A20-000115

REV. NO.	DATE	DESCRIPTION	BY	CHK	APP'D
1	25.03.31	REVISED AS MARKED	황래종	안남후	박동영
0	25.01.24	APPROVED FOR CONSTRUCTION	황래종	안남후	박동영

CONTRACTOR: SK ecoplant
COMMODITY: WW-SLD
LINE NO.: 350A-WW-SLD-ST1-N-8577

PROJECT NAME: M15X Ph4 Project
JOB NO.: 22330D
SH'T NO.: 01 / 02
REV.: 1

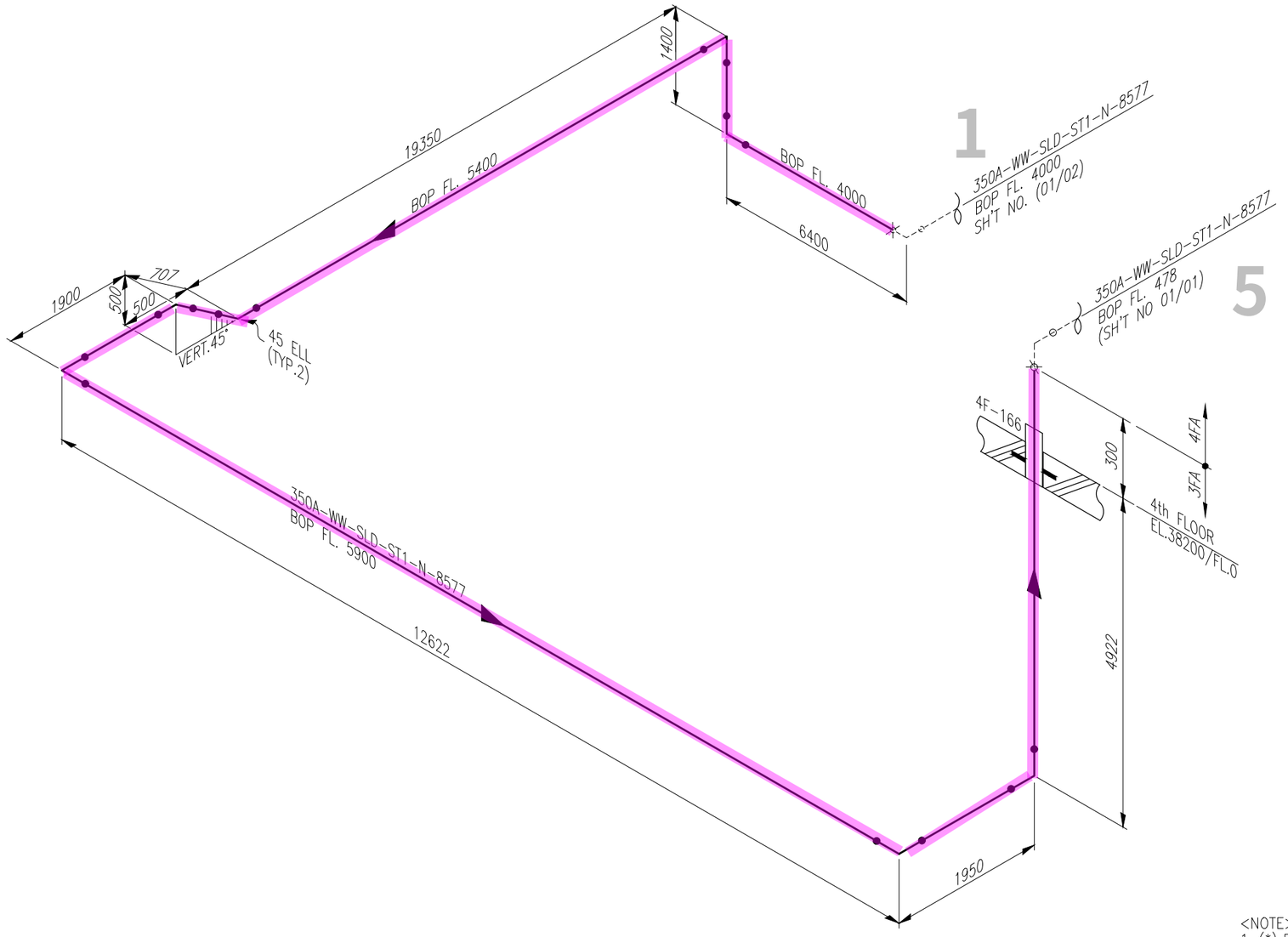

<NOTE>
1. (*) FIELD ADJUST

SK ecoplant

ITEM	SIZE	Q'TY	DESCRIPTION
		ST1	
P	350A	44.8M	PIPE, STS 304TP, ERW, BE – SCH 10S
E90	350A	5EA	ELBOW 90 DEG SR, STS304, ERW, BE – SCH 10S
E45	350A	2EA	ELBOW 45 DEG LR, STS304, ERW, BE – SCH 10S

* PIPE : P/P1 * 90° ELBOW : E90 * 45° ELBOW : E45 * TEE : T * RED.TEE : TR * STUB-IN : STU * REINFORCING PAD : RP * CON.RED : RC * ECC.RED : RE * CON.SWAGE : RCS/RCS1 * ECC.SWAGE : RES/RES1 * NIPPLE : NP/NP1/NP2 * CAP : CAP/CAP1 * PLUG : PLG * FULL COUPLING : FC * HALF COUPLING : HF/HF1
* STUB-IN : STU * SOCKET(HDPE/PVC) : SC * SADDLE(HDPE) : SD * FLANGE : F/F1 * GASKET : G/G1/G2 * BOLT & NUT : B/B1 * BLIND FLANGE : FB/FB1 * GATE VA. : VG/VG1/VG2 * BALL VA. : VB/VBL0/VB1/VB1L0/VB2/VB2L0 * BUTTERFLY VA. : VF/VF4 * CHECK VA. : VC/VC1/VC2/VC3/VC4/VC5/VC6/VC7
* GLOBE VA. : VL/VL1/VL2 * DIAPHRAGM VA. : VD/VDL0 * DAMPER : VP * QUICK COUPLING : SQC * FLEXIBLE JOINT(STEEL) : FLXB * FLEXIBLE JOINT(RUBBER) : FLXR * FLEXIBLE JOINT(STEEL_PTFE LINED) : FLXL * FLEXIBLE HOSE : FLXH * STEAM TRAP : ST * SPRAY NOZZLE : SPN * EMERGENCY SHOWER : SSH
* STRAINER(Y-TYPE) : YSTR * STRAINER(T-TYPE) : TSTR * STRAINER(BUCKET-TYPE) : BSTR * ANCHOR PLATE : STOP * BIRD SCREEN : BS * ISOLATION KIT : IK * UNLOADING BOX : UB * AIR TRAP : AT * LOTO : LOTO * SIGHT GLASS : SG * PRESSURE GAUGE : PG * SHILED : SH * SPECIAL BOLT & NUT : BL/BL1

CLIENT SK hynix 2

INSULATION	CODE	N	CONDITION	PRESS. (kg/cm2g)	TEMP. (°C)
	THICK.	–	DESIGN	3.1	60
			OPERATING	2.0	AMB

AREA W14
UNIT 3FA
REF. PLAN DWG. CJ-M15W14-PI-A30-030006-D
REF. P & ID CJ-M15W14-PR-A20-000115

REV. NO.	DATE	DESCRIPTION	BY	CHK	APP'D
0	25.01.24	APPROVED FOR CONSTRUCTION	황래종	안남후	박동영

CONTRACTOR SK ecoplant
PROJECT NAME M15X Ph4 Project
COMMODITY WW-SLD
JOB NO. 22330D
LINE NO. 350A-WW-SLD-ST1-N-8577
SH'T NO. 02 / 02
REV. 0

경고 : 본 도면은 SK HYNIX의 기업비밀 자료로서, 어떠한 경우에도 목적 외 사용, 복제, 제3자에게 공개, 누설 및 유출할 수 없으며, 회사는 유포자의 불법 사용으로 피해가 발생할 경우 유포자에게 민/형사상 책임을 요구할 수 있음.

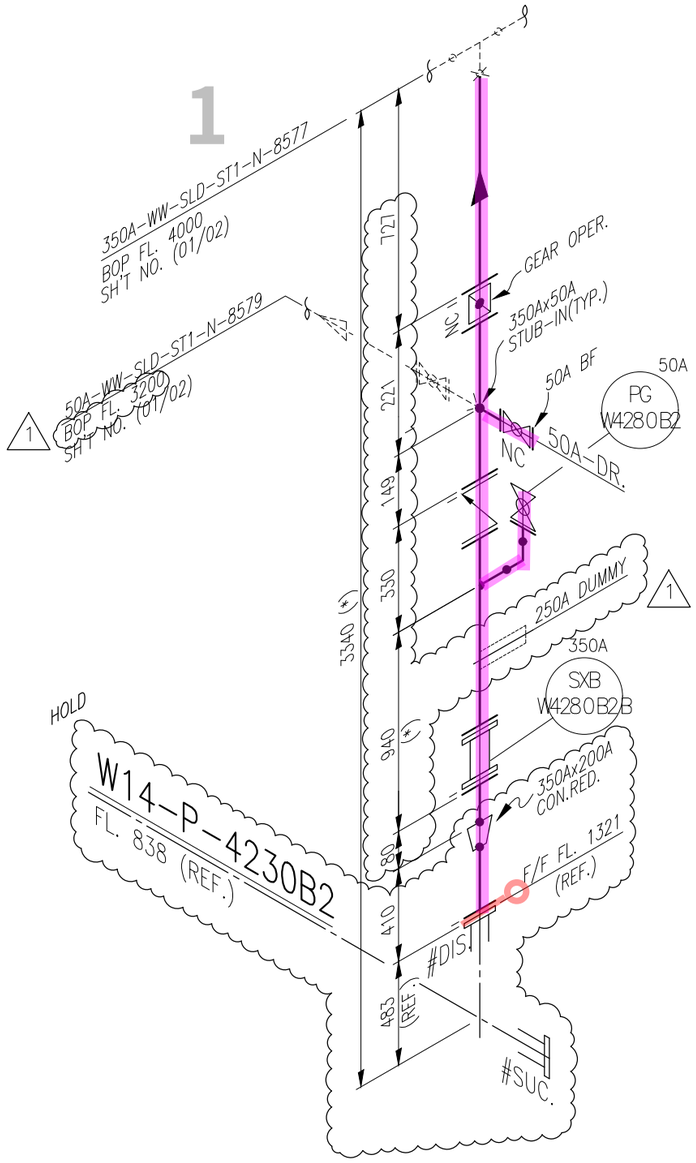

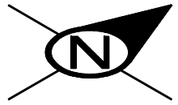

<NOTE>
1. (*) FIELD ADJUST

SK ecoplant

ITEM	SIZE	Q'TY	DESCRIPTION
		ST1	
P	350A	1.8M	PIPE, STS 304TP, ERW, BE – SCH 10S
P	200A	0.1M	PIPE, STS 304TP, ERW, BE – SCH 10S
P	50A	0.3M	PIPE, STS 304TP, ERW, PE – SCH 10S
E90	50A	1EA	ELBOW 90 DEG, STSF304, SW – SCH 10S
STU	350Ax50A	3EA	STUB-IN BRANCH
F	350A	6EA	FLG SO, KS 10K, RF, STS304
F	200A	1EA	FLG SO, KS 10K, RF, STS304
F	50A	2EA	FLG SO, KS 10K, RF, STS304
FB	50A	1EA	FLG BLIND, KS 10K, RF, STS304
G	350A	6EA	GASKET, KS 10K, RF, PTFE+EPDM, 3.0MM TH'K
G	200A	1EA	GASKET, KS 10K, RF, PTFE+EPDM, 3.0MM TH'K
G	50A	3EA	GASKET, KS 10K, RF, PTFE+EPDM, 3.0MM TH'K
B	350A	2SET	MACHINE BOLT & NUTS :STS 304 / W WASHERS
B	200A	1SET	MACHINE BOLT & NUTS :STS 304 / W WASHERS
B	50A	3SET	MACHINE BOLT & NUTS :STS 304 / W WASHERS
BL	350A	2SET	MACHINE BOLT & NUTS :STS 304 / W WASHERS(SPECIAL)
VB	50A	2EA	BALL VALVE, KS 10K, RF FLG'D, BODY-SSC13 /
			TRIM-STS304 / SEAT-PTFE, FB, LEVER
VC	350A	1EA	CHECK VALVE, KS 10K, WAFER RF, BODY-SSC13 /
			TRIM-STS304, DUAL PLATE
VF	350A	1EA	BUTTERFLY VALVE, KS 10K, WAFER RF, BODY-GCD450 /
			TRIM-STS304 / EPDM-LINED, GEAR
FLXB	350A	1EA	FLEXIBLE JOINT(TPC STEEL TYPE)
PG	50A	1EA	PRESSURE GAUGE, KS 10K, RF
LOTO	350A	1EA	LOTO
LOTO	50A	1EA	LOTO

* PIPE : P/P1 * 90° ELBOW : E90 * 45° ELBOW : E45 * TEE : T * RED.TEE : TR * STUB-IN : STU * REINFORCING PAD : RP * CON.RED : RC * ECC.RED : RE * CON.SWAGE : RCS/RCS1 * ECC.SWAGE : RES/RES1 * NIPPLE : NP/NP1/NP2 * CAP : CAP/CAP1 * PLUG : PLG * FULL COUPLING : FC * HALF COUPLING : HF/HF1
* STUB-IN : STU * SOCKET(HDPE/PVC) : SC * SADDLE(HDPE) : SD * FLANGE : F/F1 * GASKET : G/G1/G2 * BOLT & NUT : B/B1 * BLIND FLANGE : FB/FB1 * GATE VA. : VG/VG1/VG2 * BALL VA. : VB/VBL0/VB1/VB1L0/VB2/VB2L0 * BUTTERFLY VA. : VF/VF4 * CHECK VA. : VC/VC1/VC2/VC3/VC4/VC5/VC6/VC7
* GLOBE VA. : VL/VL1/VL2 * DIAPHRAGM VA. : VD/VDL0 * DAMPER : VP * QUICK COUPLING : SQC * FLEXIBLE JOINT(STEEL) : FLXB * FLEXIBLE JOINT(RUBBER) : FLXR * FLEXIBLE JOINT(STEEL_PTFE LINED) : FLXL * FLEXIBLE HOSE : FLXH * STEAM TRAP : ST * SPRAY NOZZLE : SPN * EMERGENCY SHOWER : SSH
* STRAINER(Y-TYPE) : YSTR * STRAINER(T-TYPE) : TSTR * STRAINER(BUCKET-TYPE) : BSTR * ANCHOR PLATE : STOP * BIRD SCREEN : BS * ISOLATION KIT : IK * UNLOADING BOX : UB * AIR TRAP : AT * LOTO : LOTO * SIGHT GLASS : SG * PRESSURE GAUGE : PG * SHILED : SH * SPECIAL BOLT & NUT : BL/BL1

CLIENT SK hynix 3

INSULATION	CODE	N	CONDITION	PRESS. (kg/cm2g)	TEMP. (°C)
	THICK.	–	DESIGN	3.1	60
			OPERATING	2.0	AMB

AREA W14
UNIT 3FA
REF. PLAN DWG. CJ-M15W14-PI-A30-030001-A
REF. P & ID CJ-M15W14-PR-A20-000115

REV. NO.	DATE	DESCRIPTION	BY	CHK	APP'D
1	25.03.31	REVISED AS MARKED	황래종	안남후	박동영
0	25.01.24	APPROVED FOR CONSTRUCTION	황래종	안남후	박동영

CONTRACTOR SK ecoplant
PROJECT NAME M15X Ph4 Project
COMMODITY WW-SLD
JOB NO. 22330D
LINE NO. 350A-WW-SLD-ST1-N-8578
SH'T NO. 01 / 01
REV. 1

경고 : 본 도면은 SK HYNIX의 기업비밀 자료로서, 어떠한 경우에도 목적 외 사용, 복제, 제3자에게 공개, 누설 및 유출할 수 없으며, 회사는 유포자의 불법 사용으로 피해가 발생할 경우 유포자에게 민/형사상 책임을 요구할 수 있음.

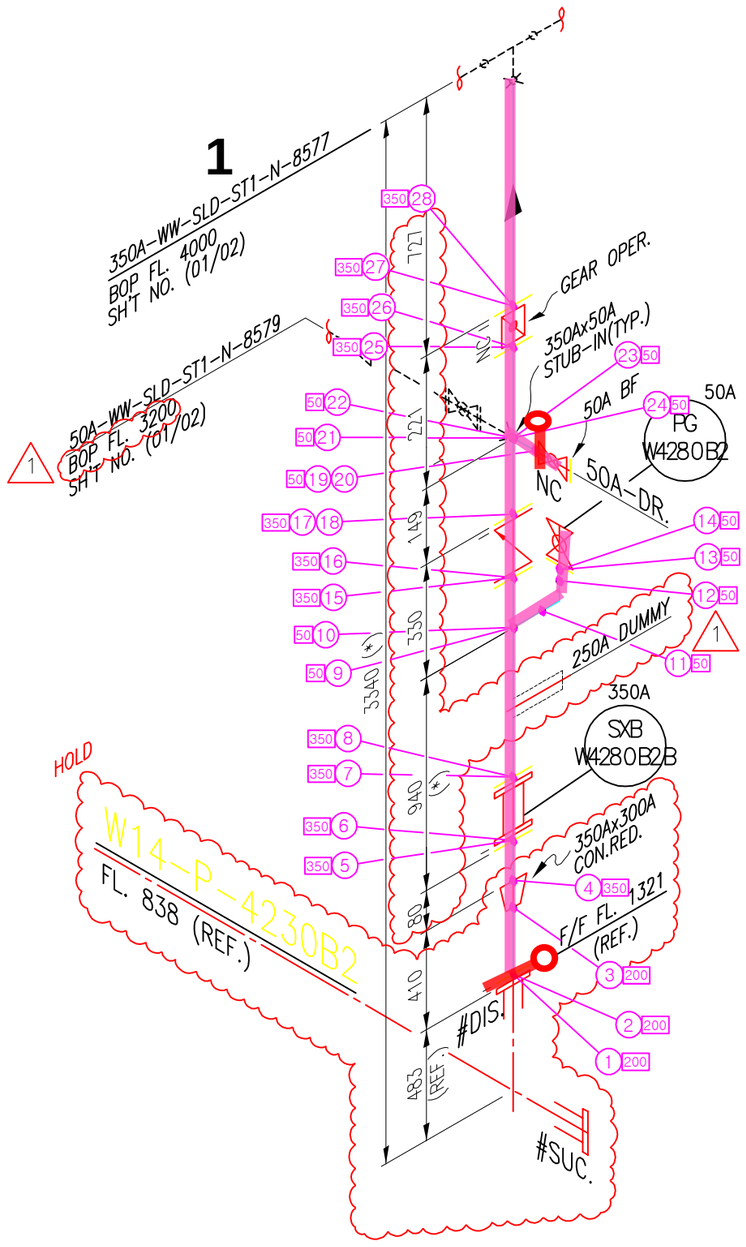

ITEM	SIZE	Q'TY	DESCRIPTION
		ST1	
P	350A	1.8M	PIPE, STS 304TP, ERW, BE – SCH 10S
P	200A	0.1M	PIPE, STS 304TP, ERW, BE – SCH 10S
P	50A	0.3M	PIPE, STS 304TP, ERW, PE – SCH 10S
E90	50A	1EA	ELBOW 90 DEG, STSF304, SW – SCH 10S
STU	350Ax50A	3EA	STUB-IN BRANCH
F	350A	6EA	FLG SO, KS 10K, RF, STS304
F	200A	1EA	FLG SO, KS 10K, RF, STS304
F	50A	2EA	FLG SO, KS 10K, RF, STS304
FB	50A	1EA	FLG BLIND, KS 10K, RF, STS304
G	350A	6EA	GASKET, KS 10K, RF, PTFE+EPDM, 3.0MM TH'K
G	200A	1EA	GASKET, KS 10K, RF, PTFE+EPDM, 3.0MM TH'K
G	50A	3EA	GASKET, KS 10K, RF, PTFE+EPDM, 3.0MM TH'K
B	350A	2SET	MACHINE BOLT & NUTS :STS 304 / W WASHERS
B	200A	1SET	MACHINE BOLT & NUTS :STS 304 / W WASHERS
B	50A	3SET	MACHINE BOLT & NUTS :STS 304 / W WASHERS
BL	350A	2SET	MACHINE BOLT & NUTS :STS 304 / W WASHERS(SPECIAL)
VB	50A	2EA	BALL VALVE, KS 10K, RF FLG'D, BODY-SSC13 /
			TRIM-STS304 / SEAT-PTFE, FB, LEVER
VC	350A	1EA	CHECK VALVE, KS 10K, WAFER RF, BODY-SSC13 /
			TRIM-STS304, DUAL PLATE
VF	350A	1EA	BUTTERFLY VALVE, KS 10K, WAFER RF, BODY-GCD450 /
			TRIM-STS304 / EPDM-LINED, GEAR
FLXB	350A	1EA	FLEXIBLE JOINT(TPC STEEL TYPE)
PG	50A	1EA	PRESSURE GAUGE, KS 10K, RF
LOTO	350A	1EA	LOTO
LOTO	50A	1EA	LOTO
RC	350Ax300A	1EA	REDUCER CON, STS304, ERW, BE – SCH 10S

<NOTE>
1. (*) FIELD ADJUST

* PIPE : P/P1 * 90° ELBOW : E90 * 45° ELBOW : E45 * TEE : T * RED.TEE : TR * STUB-IN : STU * REINFORCING PAD : RP * CON.RED : RC * ECC.RED : RE * CON.SWAGE : RCS/RCS1 * ECC.SWAGE : RES/RES1 * NIPPLE : NP/NP1/NP2 * CAP : CAP/CAP1 * PLUG : PLG * FULL COUPLING : FC * HALF COUPLING : HF/HF1
* STUB-IN : STU * SOCKET(HDPE/PVC) : SC * SADDLE(HDPE) : SD * FLANGE : F/F1 * GASKET : G/G1/G2 * BOLT & NUT : B/B1 * BLIND FLANGE : FB/FB1 * GATE VA. : VG/VG1/VG2 * BALL VA. : VB/VBL0/VB1/VB1L0/VB2/VB2L0 * BUTTERFLY VA. : VF/VF4 * CHECK VA. : VC/VC1/VC2/VC3/VC4/VC5/VC6/VC7
* GLOBE VA. : VL/VL1/VL2 * DIAPHRAGM VA. : VD/VDL0 * DAMPER : VP * QUICK COUPLING : SQC * FLEXIBLE JOINT(STEEL) : FLXB * FLEXIBLE JOINT(RUBBER) : FLXR * FLEXIBLE JOINT(STEEL_PTFE LINED) : FLXL * FLEXIBLE HOSE : FLXH * STEAM TRAP : ST * SPRAY NOZZLE : SPN * EMERGENCY SHOWER : SSH
* STRAINER(Y-TYPE) : YSTR * STRAINER(T-TYPE) : TSTR * STRAINER(BUCKET-TYPE) : BSTR * ANCHOR PLATE : STOP * BIRD SCREEN : BS * ISOLATION KIT : IK * UNLOADING BOX : UB * AIR TRAP : AT * LOTO : LOTO * SIGHT GLASS : SG * PRESSURE GAUGE : PG * SHILED : SH * SPECIAL BOLT & NUT : BL/BL1

CLIENT: SK hynix

3

INSULATION	CODE	N	CONDITION	PRESS. (kg/cm2g)	TEMP. (°C)
	THICK.	–	DESIGN	3.1	60
			OPERATING	2.0	AMB

AREA: W14
UNIT: 3FA
REF. PLAN DWG.: CJ-M15W14-PI-A30-030001-A
REF. P & ID: CJ-M15W14-PR-A20-000115

REV. NO.	DATE	DESCRIPTION	BY	CHK	APP'D
1	25.03.31	REVISED AS MARKED	황래종	안남후	박동영
0	25.01.24	APPROVED FOR CONSTRUCTION	황래종	안남후	박동영

CONTRACTOR: SK ecoplant
COMMODITY: WW-SLD
LINE NO.: 350A-WW-SLD-ST1-N-8578
PROJECT NAME: M15X Ph4 Project
JOB NO.: 22330D
SH'T NO.: 01 / 01
REV.: 1

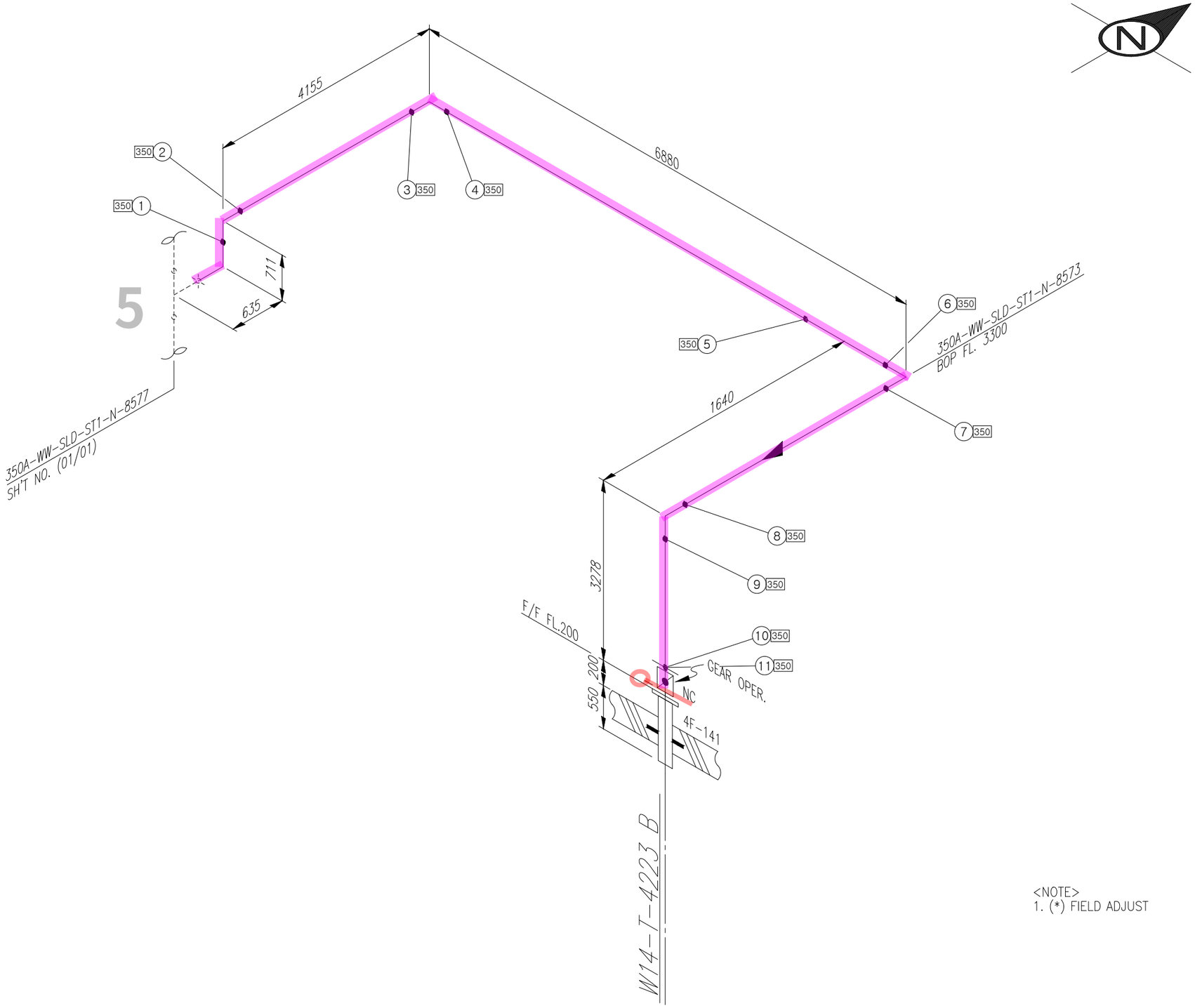

<NOTE>
1. (*) FIELD ADJUST

SK ecoplant

ITEM	SIZE	Q'TY	DESCRIPTION
		ST1	
P	350A	13.4M	PIPE, STS 304TP, ERW, BE – SCH 10S
E90	350A	5EA	ELBOW 90 DEG SR, STS304, ERW, BE – SCH 10S
VF	350A	1EA	BUTTERFLY VALVE, KS 10K, WAFER RF, BODY–GCD450 /
			TRIM–STS304 / EPDM–LINED, GEAR
F	350A	1EA	FLG SO, KS 10K, RF, STS304
G	350A	2EA	GASKET, KS 10K, RF, PTFE+EPDM, 3.0MM TH'K
BL	350A	1SET	MACHINE BOLT & NUTS :STS 304 / W WASHERS(SPECIAL)
LOTO	350A	1EA	LOTO

* PIPE : P/P1 * 90° ELBOW : E90 * 45° ELBOW : E45 * TEE : T * RED.TEE : TR * STUB-IN : STU * REINFORCING PAD : RP * CON.RED : RC * ECC.RED : RE * CON.SWAGE : RCS/RCS1 * ECC.SWAGE : RES/RES1 * NIPPLE : NP/NP1/NP2 * CAP : CAP/CAP1 * PLUG : PLG * FULL COUPLING : FC * HALF COUPLING : HF/HF1
* STUB-IN : STU * SOCKET(HDPE/PVC) : SC * SADDLE(HDPE) : SD * FLANGE : F/F1 * GASKET : G/G1/G2 * BOLT & NUT : B/B1 * BLIND FLANGE : FB/FB1 * GATE VA. : VG/VG1/VG2 * BALL VA. : VB/VBL0/VB1/VB1L0/VB2/VB2L0 * BUTTERFLY VA. : VF/VF4 * CHECK VA. : VC/VC1/VC2/VC3/VC4/VC5/VC6/VC7
* GLOBE VA. : VL/VL1/VL2 * DIAPHRAGM VA. : VD/VDL0 * DAMPER : VP * QUICK COUPLING : SQC * FLEXIBLE JOINT(STEEL) : FLXB * FLEXIBLE JOINT(RUBBER) : FLXR * FLEXIBLE JOINT(STEEL_PTFE LINED) : FLXL * FLEXIBLE HOSE : FLXH * STEAM TRAP : ST * SPRAY NOZZLE : SPN * EMERGENCY SHOWER : SSH
* STRAINER(Y-TYPE) : YSTR * STRAINER(T-TYPE) : TSTR * STRAINER(BUCKET-TYPE) : BSTR * ANCHOR PLATE : STOP * BIRD SCREEN : BS * ISOLATION KIT : IK * UNLOADING BOX : UB * AIR TRAP : AT * LOTO : LOTO * SIGHT GLASS : SG * PRESSURE GAUGE : PG * SHILED : SH * SPECIAL BOLT & NUT : BL/BL1

CLIENT SK hynix 4

INSULATION	CODE	N
	THICK.	–

CONDITION	PRESS. (kg/cm2g)	TEMP. (°C)
DESIGN	3.1	60
OPERATING	2.0	AMB

AREA W14
UNIT 4FA
REF. PLAN DWG. CJ-M15W14-PI-A30-040006-B
REF. P & ID CJ-M15W14-PR-A20-000114

REV. NO.	DATE	DESCRIPTION	BY	CHK	APP'D
0	25.01.24	APPROVED FOR CONSTRUCTION	황래종	안남후	박동영

CONTRACTOR SK ecoplant
PROJECT NAME M15X Ph4 Project
COMMODITY WW–SLD
JOB NO. 22330D
LINE NO. 350A–WW–SLD–ST1–N–8573
SH'T NO. 01 / 01
REV. 0

경고 : 본 도면은 SK HYNIX의 기업비밀 자료로서, 어떠한 경우에도 목적 외 사용, 복제, 제3자에게 공개, 누설 및 유출할 수 없으며, 회사는 유포자의 불법 사용으로 피해가 발생할 경우 유포자에게 민/형사상 책임을 요구할 수 있음.

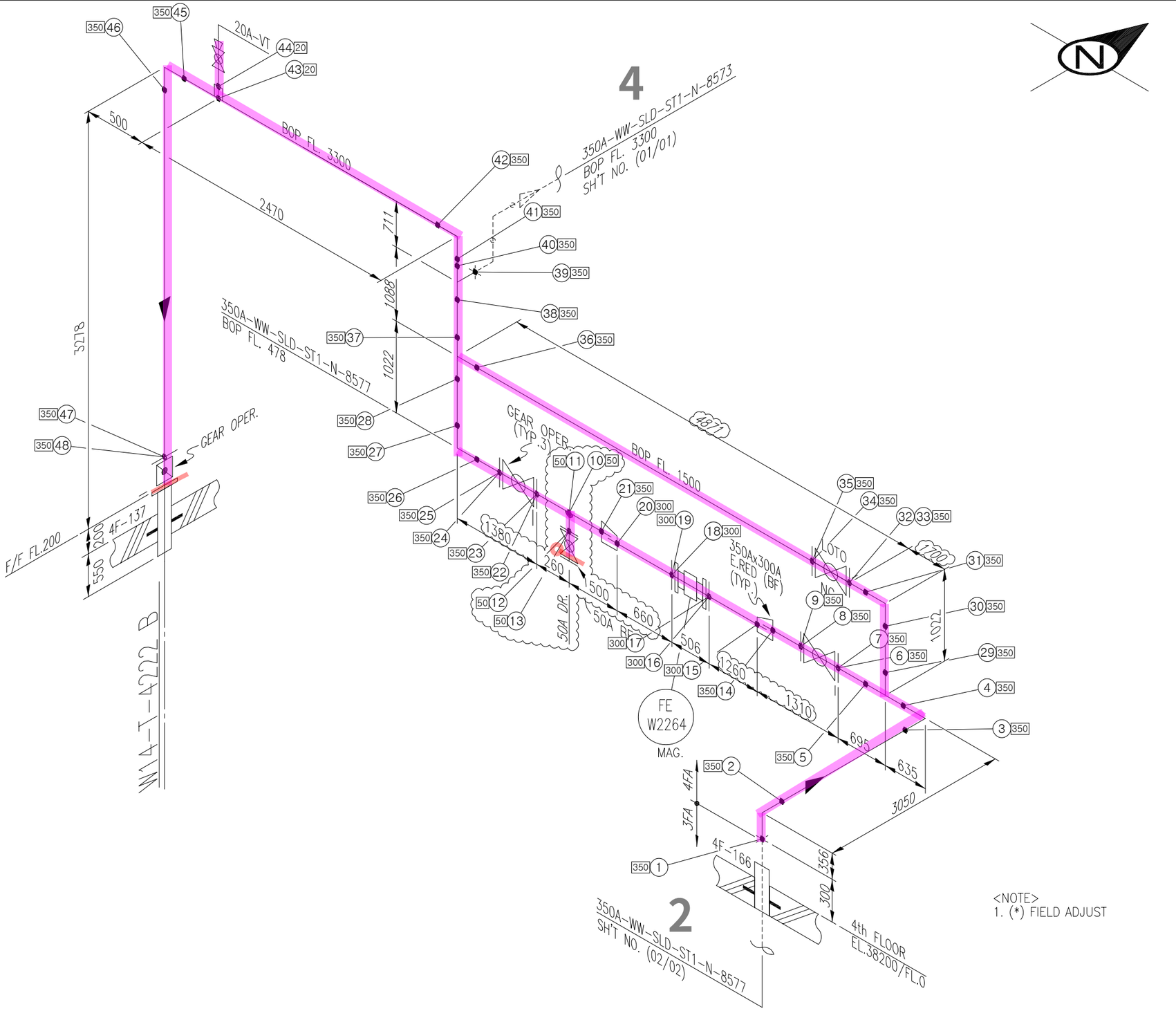

<NOTE>
1. (*) FIELD ADJUST

SK ecoplant

ITEM	SIZE	Q'TY	DESCRIPTION
		ST1	
P	350A	15.5M	PIPE, STS 304TP, ERW, BE – SCH 10S
P	300A	2.8M	PIPE, STS 304TP, ERW, BE – SCH 10S
P	50A	0.1M	PIPE, STS 304TP, ERW, BE – SCH 10S
NP1	20A	1EA	NIPPLE, STS 304TP, ERW, TOE – SCH 40S
E90	350A	6EA	ELBOW 90 DEG SR, STS304, ERW, BE – SCH 10S
T	350A	3EA	TEE EQUAL, STS304, ERW, BE – SCH 10S
RE	350Ax300A	2EA	REDUCER ECC, STS304, ERW, BE – SCH 10S
STU	350Ax50A	1EA	STUB-IN BRANCH
HF	20A	1EA	COUPLING HALF, STSF304, SW – SCH 10S
PLG	20A	1EA	PLUG ROUND HEAD, STSF304, SCR'D
VB1	20A	1EA	BALL VALVE, KS 10K, SCR'D, BODY-STSF304 /
			TRIM-STS304 / SEAT-PTFE, FB, LEVER
VB	350A	3EA	BALL VALVE, KS 10K, RF FLG'D, BODY-SSC13 /
			TRIM-STS304 / SEAT-PTFE, FB, GEAR
VB	50A	1EA	BALL VALVE, KS 10K, RF FLG'D, BODY-SSC13 /
			TRIM-STS304 / SEAT-PTFE, FB, LEVER
VF	350A	1EA	BUTTERFLY VALVE, KS 10K, WAFER RF, BODY-GCD450 /
			TRIM-STS304 / EPDM-LINED, GEAR
F	350A	7EA	FLG SO, KS 10K, RF, STS304
F	300A	2EA	FLG SO, KS 10K, RF, STS304
F	50A	1EA	FLG SO, KS 10K, RF, STS304
FB	50A	1EA	FLG BLIND, KS 10K, RF, STS304
G	350A	8EA	GASKET, KS 10K, RF, PTFE+EPDM, 3.0MM TH'K
G	300A	2EA	GASKET, KS 10K, RF, PTFE+EPDM, 3.0MM TH'K
G	50A	2EA	GASKET, KS 10K, RF, PTFE+EPDM, 3.0MM TH'K
B	350A	6SET	MACHINE BOLT & NUTS :STS 304 / W WASHERS
B	300A	2SET	MACHINE BOLT & NUTS :STS 304 / W WASHERS
B	50A	2SET	MACHINE BOLT & NUTS :STS 304 / W WASHERS
BL	350A	1SET	MACHINE BOLT & NUTS :STS 304 / W WASHERS(SPECIAL)
LOTO	350A	1EA	LOTO

* PIPE : P/P1 * 90° ELBOW : E90 * 45° ELBOW : E45 * TEE : T * RED.TEE : TR * STUB-IN : STU * REINFORCING PAD : RP * CON.RED : RC * ECC.RED : RE * CON.SWAGE : RCS/RCS1 * ECC.SWAGE : RES/RES1 * NIPPLE : NP/NP1/NP2 * CAP : CAP/CAP1 * PLUG : PLG * FULL COUPLING : FC * HALF COUPLING : HF/HF1
* STUB-IN : STU * SOCKET(HDPE/PVC) : SC * SADDLE(HDPE) : SD * FLANGE : F/F1 * GASKET : G/G1/G2 * BOLT & NUT : B/B1 * BLIND FLANGE : FB/FB1 * GATE VA. : VG/VG1/VG2 * BALL VA. : VB/VBL0/VB1/VB1L0/VB2/VB2L0 * BUTTERFLY VA. : VF/VF4 * CHECK VA. : VC/VC1/VC2/VC3/VC4/VC5/VC6/VC7
* GLOBE VA. : VL/VL1/VL2 * DIAPHRAGM VA. : VD/VDL0 * DAMPER : VP * QUICK COUPLING : SQC * FLEXIBLE JOINT(STEEL) : FLXB * FLEXIBLE JOINT(RUBBER) : FLXR * FLEXIBLE JOINT(STEEL_PTFE LINED) : FLXL * FLEXIBLE HOSE : FLXH * STEAM TRAP : ST * SPRAY NOZZLE : SPN * EMERGENCY SHOWER : SSH
* STRAINER(Y-TYPE) : YSTR * STRAINER(T-TYPE) : TSTR * STRAINER(BUCKET-TYPE) : BSTR * ANCHOR PLATE : STOP * BIRD SCREEN : BS * ISOLATION KIT : IK * UNLOADING BOX : UB * AIR TRAP : AT * LOTO : LOTO * SIGHT GLASS : SG * PRESSURE GAUGE : PG * SHILED : SH * SPECIAL BOLT & NUT : BL/BL1

CLIENT
SK hynix 5

INSULATION	CODE	N	CONDITION	PRESS. (kg/cm2g)	TEMP. (°C)
	THICK.	–	DESIGN	3.1	60
			OPERATING	2.0	AMB

AREA W14
UNIT 4FA
REF. PLAN DWG. CJ-M15W14-PI-A30-040006-A
REF. P & ID CJ-M15W14-PR-A20-000115

REV. NO.	DATE	DESCRIPTION	BY	CHK	APP'D
0	25.01.24	APPROVED FOR CONSTRUCTION	황래종	안남후	박동영

CONTRACTOR SK ecoplant
PROJECT NAME M15X Ph4 Project
COMMODITY WW-SLD
JOB NO. 22330D
LINE NO. 350A-WW-SLD-ST1-N-8577
SH'T NO. 01 / 01
REV. 0

경고 : 본 도면은 SK HYNIX의 기업비밀 자료로서, 어떠한 경우에도 목적 외 사용, 복제, 제3자에게 공개, 누설 및 유출할 수 없으며, 회사는 유포자의 불법 사용으로 피해가 발생할 경우 유포자에게 민/형사상 책임을 요구할 수 있음.